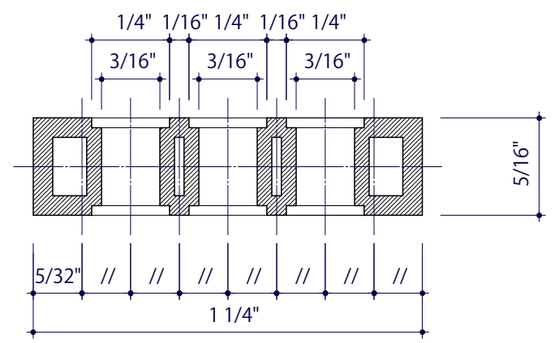

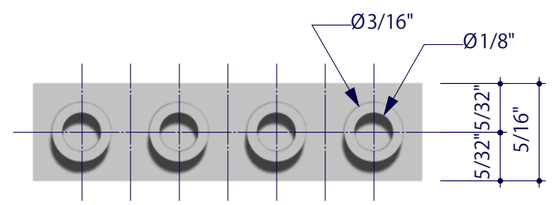

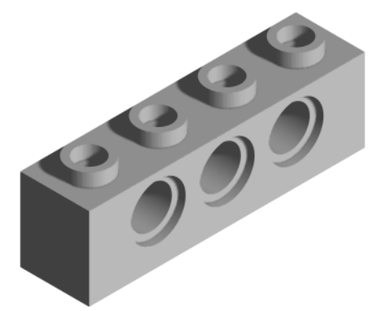

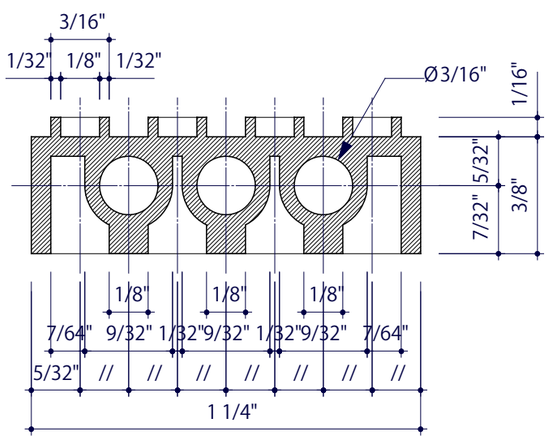

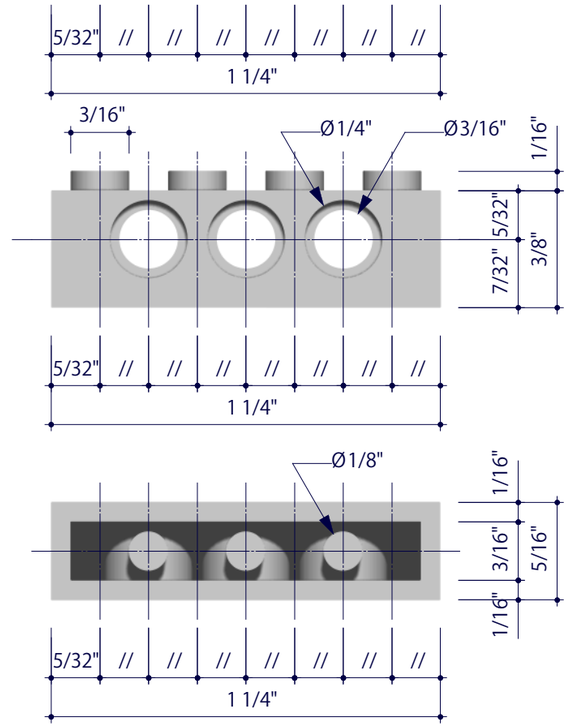

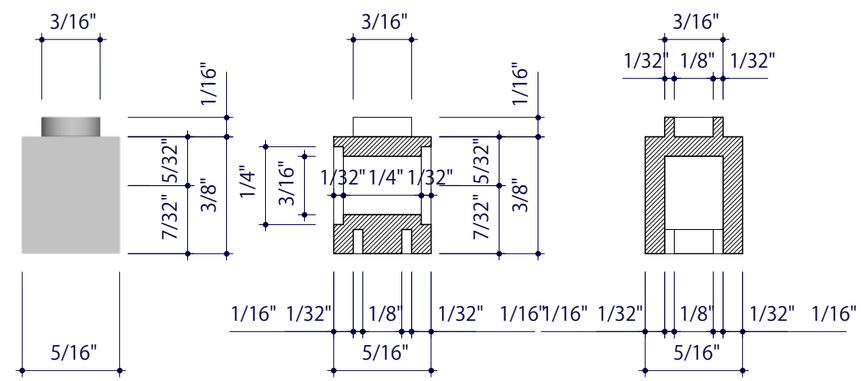

ZERO OFFICE CO., LTD. XXX, X-X-X, XXXXXXXX, XXXXXXXX-XX, TOKYO 15X-XXXX JAPAN PHONE : +81-3-XXXX-XXXX / HTTP://WWW.ZERO-OFFICE.COM	PROJECT LEGO	TITLE LEGO TECHNIC BRICK 1*4*1	SCALE 2:1	DATE 1999, 10, 09	DRAWING T, Yamazaki	NO